1

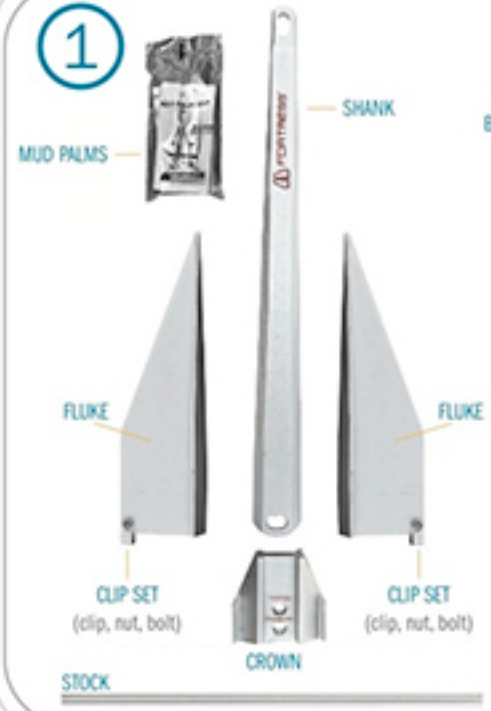

1. Install the **mud palms**, one to each side of the **crown**, using the 8 **nuts** & **bolts**

3

1. Remove **clips** from **flukes**
2. Slide **flukes** into the grooves in both sides of the **crown**

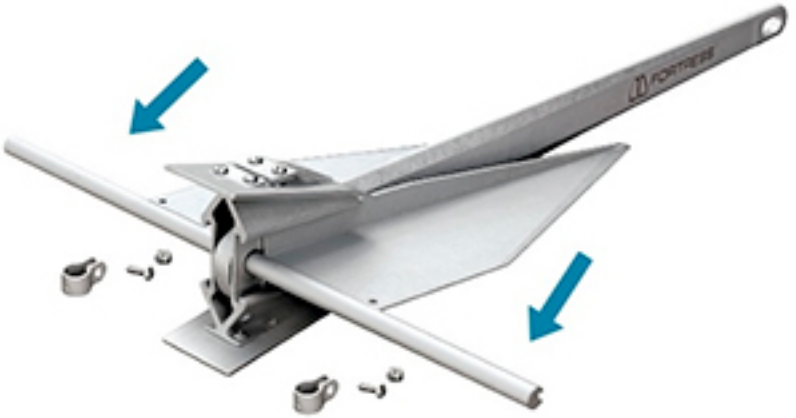

2

Fortress: Insert wider end of **shank** into **crown**

Guardian: Either end of the **shank** can be used

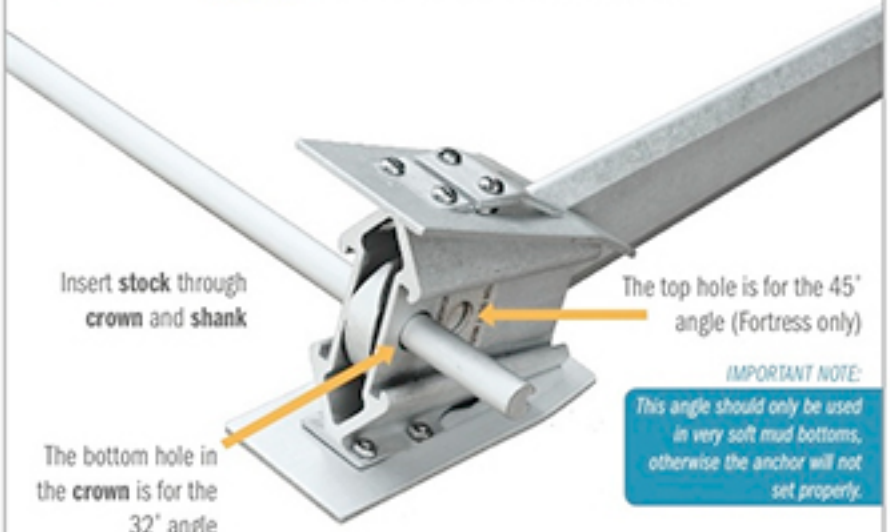

IMPORTANT NOTE:
This angle should only be used in very soft mud bottoms, otherwise the anchor will not set properly.

4

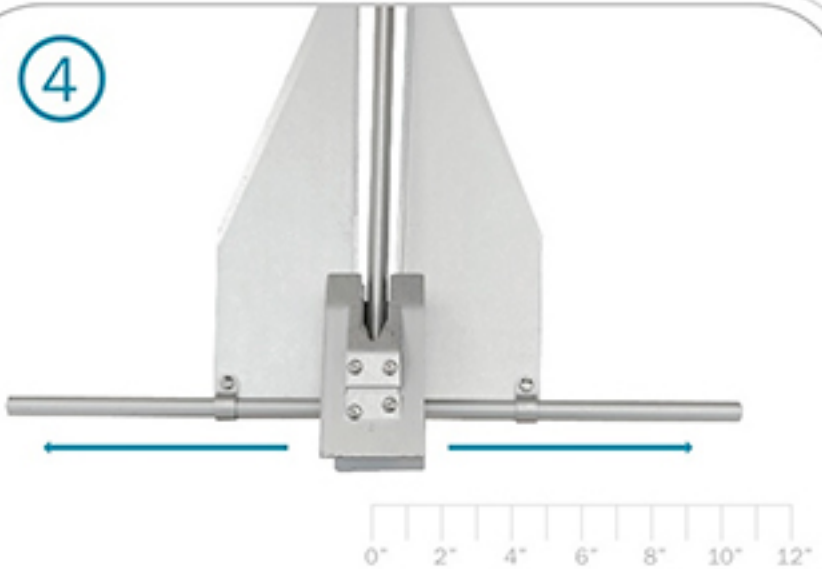

1. Using a ruler or tape measurer, center **stock** in the anchor accurately
2. Re-attach **clips** and tighten **nuts** & **bolts**